"OAL" GUIDE BAR		STAGE TRAVEL	
inches	mm "XXX"	inches	mm
6	152	4	102
14	356	12	305

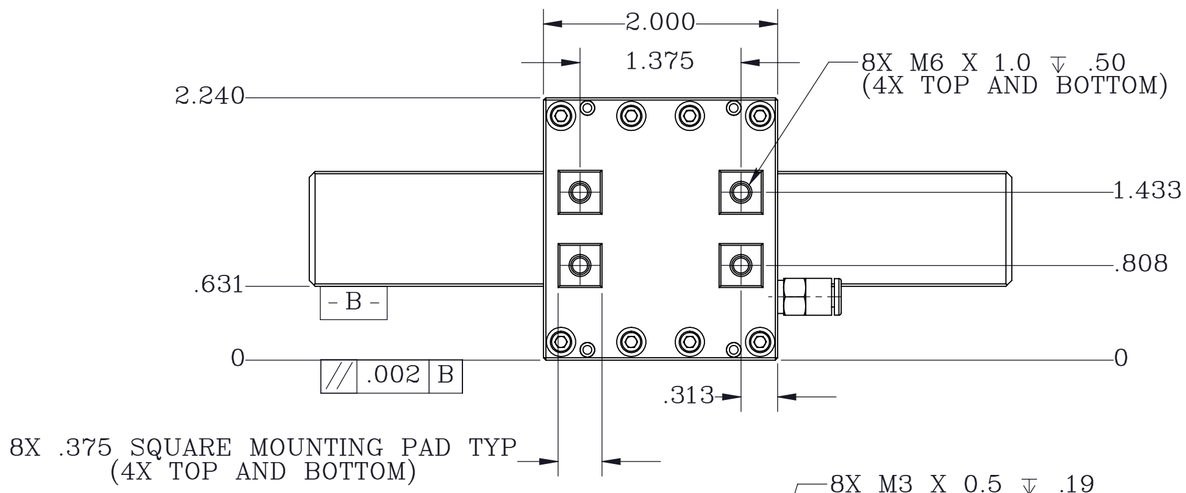

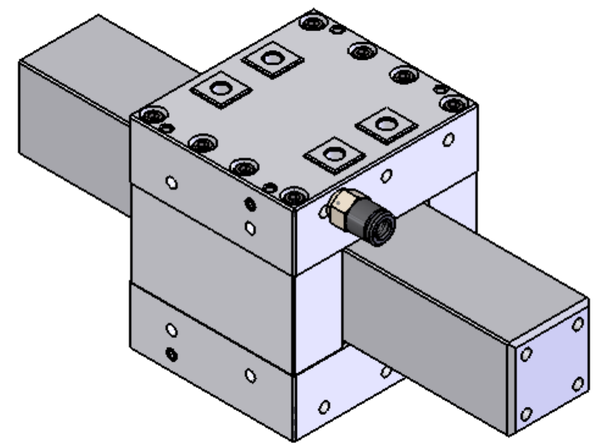

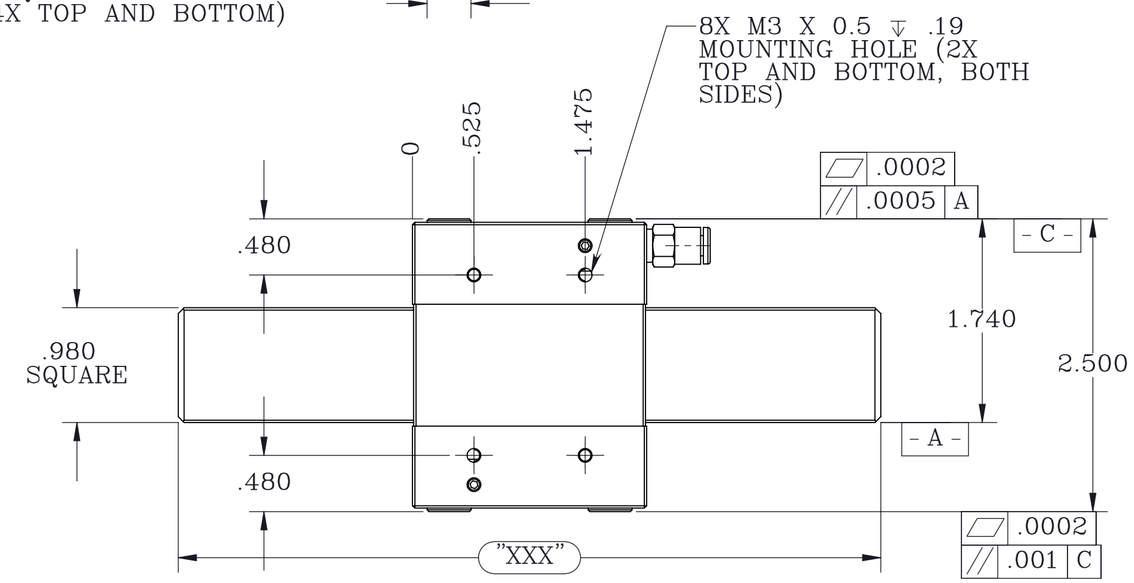

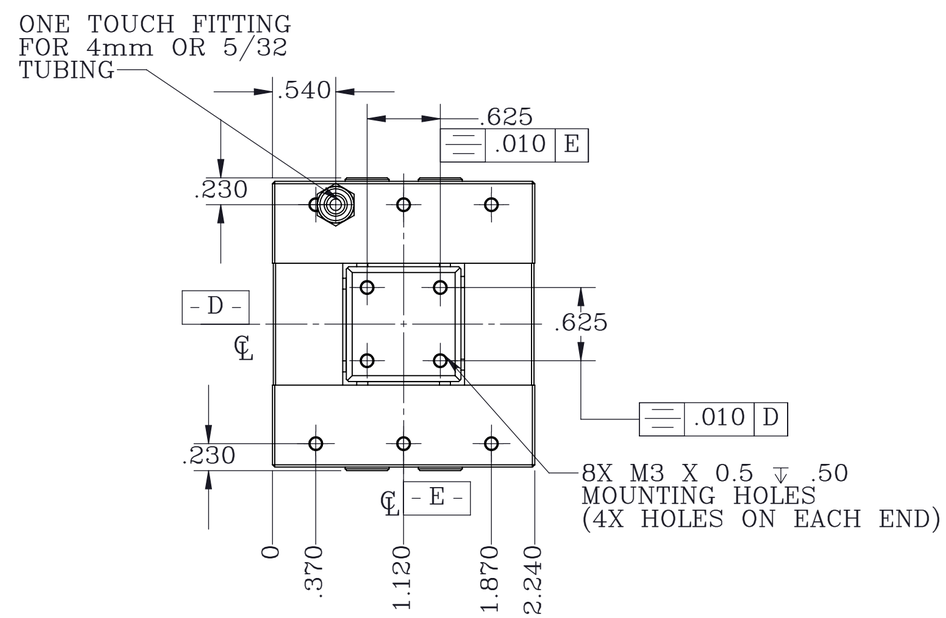

NOTES:

1. MATERIAL AND FINISH:
   HOUSINGS AND GUIDE BAR: BLACK ANODIZED ALUMINUM
   BEARINGS: POROUS CARBON

2. "XXX" IN MILLIMETERS DENOTED THE LAST 3 DIGITS OF THE ASSEMBLY PART NUMBER AS LISTED IN THE CHART ABOVE

PROPRIETARY ITEM:

THIS DRAWING CONTAINS INFORMATION PROPRIETARY TO NEW WAY MACHINE COMPONENTS, INC. ANY REPRODUCTION, DISCLOSURE, OR USE OF THIS DRAWING OR THE INFORMATION CONTAINED HEREIN IS EXPRESSLY PROHIBITED EXCEPT AS NEW WAY MAY OTHERWISE AGREE TO IN WRITING. ALL RIGHTS RESERVED BY NEW WAY MACHINE COMPONENTS, INC.

TOLERANCES UNLESS OTHERWISE SPECIFIED
ANGLES ± 1/2°
DECIMALS .XX .010
DECIMALS .XXX .005
FRACTIONS 1/64
SURFACE ROUGHNESS 63 RMS MAX.
BREAK ALL SHARP EDGES .005-.020

TITLE: 1 X 1 STANDARD SLIDE ASSEMBLY			NEWWAY air bearings
DRAWN: CSS	DATE: 4/14/14	MATERIAL: SEE NOTES	
CHECKED:	DATE:	HEAT TREAT:	EWO. NO.
SCALE: 1:1	SHT. 1 OF 1		
USED ON:		FINISH: SEE NOTES	DWG. NO. S40-03050-025XXX-C REV. —